JOPPE-PRESPROUTING SYSTEM®

MANUAL

Professional and large-scale pre-germination

Joppe-Pregerm BV
Nolleweg 3
3248 LE Melissant
The Netherlands

Tel. +31 (0) 187 601212
E-mail: info@voorkiemen.nl
Internet: www.presprouting.com

Table of contents

- To users 3
- Purpose of use 3
- Warranty and liability 4
- General instructions 5
- Operating instructions and safety instructions 5
- Operating procedure Sprinter sprout rack 6
- Appendix: Spare parts 12

Intermediary
Joppe-Pregerm BV
Nolleweg 3
3248 LE MELISSANT
The Netherlands
CoC no: NL7114 1421

The general terms and conditions of Joppe-Pregerm BV have been filed with the Chamber of Commerce. You can find them at www.voorkiemen.nl/downloads. You can request them free of charge from Joppe-Pregerm BV.

Manufacturer of sprouting racks, catch hook, spacer model Flex, support rods as far as the original invoice shows:

VSS Machinebouw BV
Ovezandseweg 6A
4436 RE, Oudelande
The Netherlands
T. 0113 567 050
E. info@vssmachinebouw.com
I. www.vssmachinebouw.com

General terms and conditions of VSS Machinebouw BV: version of the METAALUNIE valid at the time of order confirmation, if there is no order confirmation, the invoice date applies.
You can find the terms of delivery at vssmachinebouw.com or you can receive them free of charge from VSS Machinebouw.

Supplier pre-germination bags® , as far as the original invoice shows:

TradeMax Wolf
de Amert 204
5460 AA VEGHEL
The Netherlands

General terms and conditions of TradeMax Wolf : Eurojute, version valid at the time of order confirmation, if there is no order confirmation, the invoice date applies.
You can find these at www. trademax.nu/en/ or you can receive them free of charge from TradeMax

Aan de gebruikers

You have made a good choice by purchasing Joppe pre-germination system. You can now pre-germinate your potatoes in a modern way with little labour. This pre-germination system consists of pre-germination racks, pre-germination bags® and accessories.
Accessories include a catch hook to lift these racks, a set of two FLEX spacers to keep the pre-germination bags® open during filling and a small securing hook to hold the collapsed legs together.
Due to their unique construction, the pre-germination racks and pre-germination bags® require minimum maintenance.

CAUTION:
Before anyone starts working with Pre-Germination System Joppe® , this manual should be studied thoroughly first. This is to ensure safe, trouble-free operation.

Keep this booklet carefully so that it can always be consulted. In the unlikely event of difficulties or questions after reading this manual, please contact your dealer. He will be happy to help you.

Purpose of use

Sprouting racks are only suitable for storing and transporting potatoes provided the total weight of the load does not exceed 1,400 Kg for Sprinter2 sprouting racks. Each pre-sprouting rack should be transported with the standard catch hook attached and locked to the fork-lift truck or lifting mast.

Joppe® pre-germination system must absolutely not be used for passenger transport!

When transporting empty Sprinter sprouting racks on a trolley, they must be securely fastened.

CAUTION:

The capacity of forklift or lifting mast must be greater than the total mass of pre-germination rack, catch hook and contents of pre-germination bags® . The mass of forklift or lifting mast must be at least 50% more than the total mass of pre-germination rack, catch hook and contents of the pre-germination bags® .

Garantie en aansprakelijkheid

Warranty and liability

VSS Machinebouw BV guarantees the soundness of the items delivered in terms of material and/or construction defects. However, this guarantee is limited in all cases to replacing or repairing the defective item or part thereof free of charge. VSS Machinebouw BV cannot be held responsible for any damage or costs resulting from faulty delivery and/or defective items delivered by VSS Machinebouw BV within the guarantee period.

The warranty period of all types of pre-germination racks, catch hook, Flex spacer, support rods is one year, from date of delivery.

TradeMax Wolf guarantees the soundness of the pre-germination bags® .
The warranty period is three years, from date of delivery As a condition, these guarantees only apply with the following method of use and storage:

(a) The pre-germination bags® , germination racks and accessories are used only for the pre-germination of potatoes.

b) The pre-germination bags® shall be stored outside the period of pre-germination, out of reach of sunlight, chemicals and vermin.

For other uses, the warranty conditions agreed in writing at the time of purchase apply.

All persons using and/or working on the Joppe® pre-germination system (assembly, adjustment, maintenance, etc.) must read this manual in advance, to avoid danger, and follow the instructions.

Pre-Germination System Joppe® may furthermore only be used for the purpose described in the manual. This includes the following:

Only the instructions and within the functional limits (e.g. max. total weight) may be

Work must only be carried out in accordance with the instructions and within the functional limits (e.g. max. gross weight) specified in the installation, operating, maintenance and repair instructions, including the valid errata and supplements.

Sound and proper tools must be used.

Only original parts may be used for replacement and assembled as prescribed.

Sprinter germ racks may only be stacked on a flat, hard concrete floor.

Sprinter sprout racks may be stacked 3-high inside the shed and 2-high outside.

The locking bolts and nuts must be properly tightened.

The locally applicable accident prevention, safety, traffic and transport regulations must be observed.

Only persons familiar with the system and aware of the possible dangers may work with and/or on the Joppe® pre-germination system.

Changes to all types of pre-germination racks, catch hook, spacers model Flex, support rods that have not been approved in writing by VSS Machinebouw BV exclude any liability ofVSS Machinebouw BV regarding possible damage.

Changes to pre-germination bags® not approved in writing by TradeMax Wolf exclude any liability of TradeMax Wolf with regard to possible damage.

Failure to comply with the above rules shall be considered gross negligence, which cancels any liability of VSS Machinebouw BV and TradeMax Wolf for any resulting consequences: The risk then lies entirely and exclusively with the user.

General instructions for all models of sprouting racks

Pre-germination system Joppe® consists of pre-germination bags® and Sprinter germination racks.

Below are the general instructions that apply to each model of sprouting rack. Further on in this manual you will find the instructions for each sprouting rack. Please read everything carefully.

Instructions and safety instructions

When working with the Joppe® pre-germination system, always use proper pre-germination racks and pre-germination bags® .

Adapt the driving speed to the safe use of this system.

Lock the catch hook with the securing chain!

Always ensure that the following parts are tightened securely:
Sprinter sprout rack: The four pivot bolts and locking pins of the sprout rack and the end stops.

Sliding the outer pre-germination bags® in and out can be done easily by hand.
As an aid, a solid round rod about 600 mm long can be inserted into the tubes. Your power to place the pre-germination bags® on the rack is thus greatly increased.

When stacking, make sure that the lower Sprinter sprouting rack stands on a flat, hard concrete floor.
The stop strips, under the bottom beams should be within the beams.
Load the pre-germination bags® in the pre-germination rack evenly enough that the load cannot fall off.
Move the pre-germination rack only with the catch hook. Pick up the pre-germination rack, by picking up the pre-germination rack with the forklift/lifting mast and catch hook, placing the hooks of the catch hook under the main beams and then lifting the whole rack. Distribute the load as evenly as possible between the two forks.
Keep the centre of gravity of the load as close to the fork carriage as possible.

Do not allow the lifting mast to tilt forward during transport or unloading to prevent the front germinationrack slipping off the forks unexpectedly. Do not transport the pre-germination rack higher than 20 cm above the ground to keep the transport implement as stable as possible.

Always keep sufficient pressure on all wheels of the transport implement; therefore take into account shifting the centre of gravity during lifting and transport.

Take particular care when working in rough terrain and on slopes. Use counterweights and/or twin wheels if necessary.

Do not suddenly brake very strongly so that excessive forces are put on the catch hook.

When transporting empty sprouting racks on a trolley, they should be securely fastened.

Construction Sprinter sprout rack

1. Lift the germ rack from the pile	2. Remove the four locking pins from the rack.	3.The securing hook holds the legs together
3. Release the securing hook from the lower leg	4. Release the lower leg	5. and secure it with a locking pin
6. The second leg is still hanging from the top rack.	7. Release the securing hook and lower the second leg to the U stop.	8. Also secure this leg with locking pins.

Pre-germination bag preparation

1. Stick the rain flap to the pre-germination bag. This will always remain attached to the bag	2. Insert the support rods into the lining of the pre-germination bag	3. Hang the empty pre-germination bags on the Sprinter germination rack
4. Sprinter2 sprout rack: Standard 10ZD bag (black cords): 3 bags outside the legs, 8 bags inside the legs	5. Sprinter2 sprout rack: Wide 14ZD pocket (white cords): 3 bags outside the legs, 5 bags inside the legs.	

Use of FLEX spacer

1. When all pre-germination bags are on the rack, place the FLEX spacer on its side on the bags with rods	2. If the rods, in pairs of two, are well in front of the U-profile, then tilt the FLEX	3. The Sprinter sprouting rack is now ready for filling.

Filling the pre-germination racks

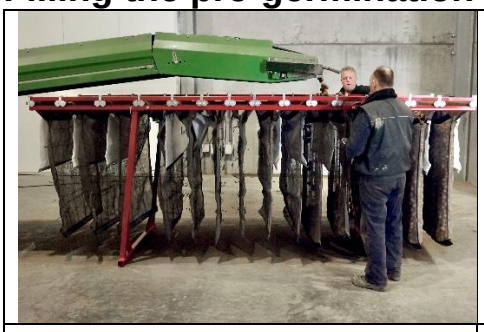		
1. Advice is to start at the front pocket, from the hall filler.	2. The last pre-germination bag is filled	3. Filling from a big bag using a telescopic handler.

Moving with the catch hook

1. Attach the catch hook to the fork carriage of the forklift with the chain	2. Pick up the Sprinter sprout rack with the catch hook	3. Using the forklift with catch hook, put the germination racks in place.

Hardening

1. Indoor: in a barn, with the breeze	2. Indoor, 3-high in draw barn	3. Outside, is best as long as it does not freeze. 1 m (3 ft) distance between racks.

Transport to the field

1. Directly with a telescopic handler in a belt planter

2. Directly with a telescopic handler in a cup planter

3. The pre-germinated tubers can possibly be taken to the field via a (cabbage) box.

4. On-farm emptying of pre-germination bags into the bucket

5. Sprouting rack above the bucket

6. pulling off the Velcro

7. Empty pre-germination bags do not blow away.

8. The bucket with pre-germinated poters goes to the country

9. When the land is far from the farm, transport can be done by trailer.

The planter is filled in 30 sec.

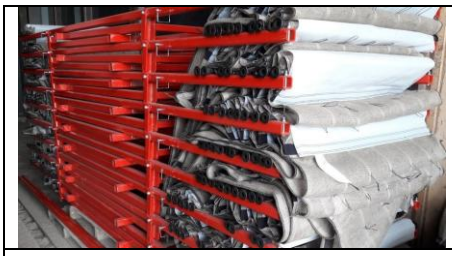

The empty racks are folded back in. The pre-germination bags remain on the ends.
Storage of empty bags can also be done in a sealed box.

Visit www.presprouting.com

Here you will find clear videos and even more up-to-date information.

Meer info

Werkwijze kiemrek Classic

Bijlage: Onderdelen

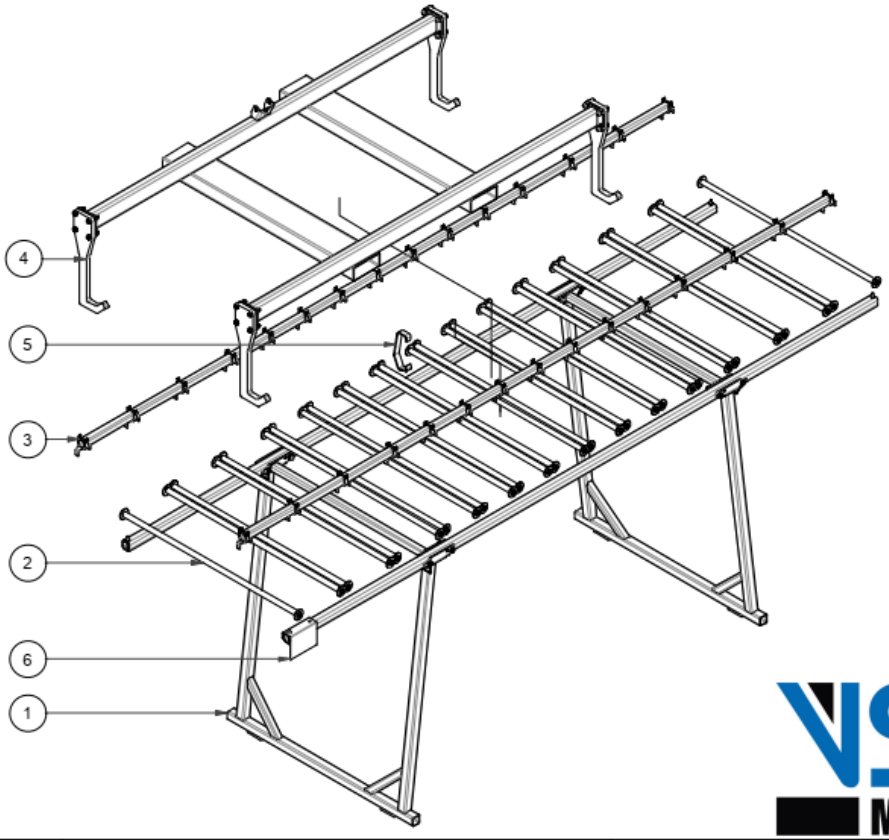

KR.00.00.00	Kiemrek	Sprouting rack
	Keimgestell	Support de germination

VSS MACHINEBOUW	Onderdelen	Spare-parts	Ersatzteile	Pieces de rechange	Ovezandseweg 6a 4436 RE Oudelande Tel: +31 113 567050 Fax:+31 113 563939 www.vssmachinebouw.com
	KR.00.00.00 Kiemrek			Rev 1	

Pos.	#	No.	Omschrijving	Description	Beschreibung	Description
1	1	KR.01.00.00	Hoofdframe	Main frame	Hauptrahmen	Cadre principal
2	1	KR.02.14.00	Draagstangen 14 zakken (28 stangen)	Carrying bars bags	Tragstange tasche	Bar comptable poche
3	1	KR.03.14.00	Afstandhouders set 14 zakken (30 beugels)	Spacer	Abstandshalter	Espaceur
4	1	KR.04.00.00	Transportbok	Transport trestle	Transportbock	Chevalet de transport
5	1	KR.04.03.00	Transporthaak	Transport hook	Transporthaken	Crochet de transport
6	1	KR.10.02.01	Bevestigingsplaat labels	Tag holder	Tag-Halter	Porte-étiquette

Bijlage: Onderdelen

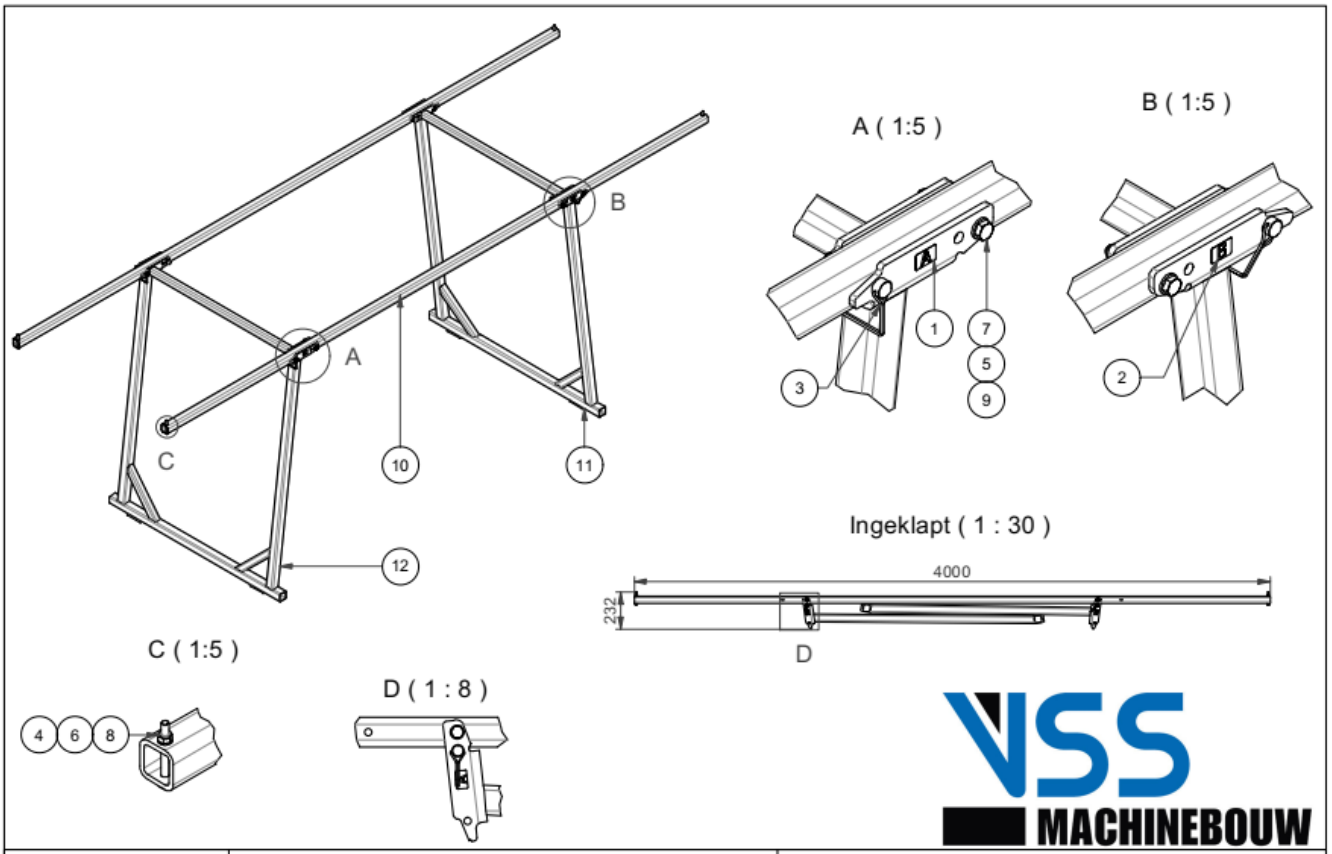

KR.01.00.00	Hoofdframe	Main frame
	Hauptrahmen	Cadre principal

VSS MACHINEBOUW

Onderdelen	Spare-parts	Ersatzteile	Pieces de rechange

KR.01.00.00 Hoofdframe

Rev

Ovezandseweg 6a
4436 RE Oudelande
Tel: +31 113 567050
Fax:+31 113 563939
www.vssmachinebouw.com

Pos.	#	No.	Omschrijving	Description	Beschreibung	Description
1	2	201.KR.0.020.0	Sticker A	-	-	-
2	2	201.KR.0.020.1	Sticker B	-	-	-
3	4	216.412.075.0	Borgpen vierkant			
4	8	DIN 125A M8	Sluitring	Washer	Unterlegscheibe	Rondelle
5	8	DIN 125A M12	Sluitring	Washer	Unterlegscheibe	Rondelle
6	4	DIN 931 M8x75	Zeskantbout	Bolt	Schaube	Boulon
7	4	DIN 931 M12x90	Zeskantbout	Bolt	Schraube	Boulon
8	4	DIN 985 M8	Borgmoer	Lock nut	Mutter selbstsichernd	Ecrou autobloquant
9	4	DIN 985 M12	Borgmoer	Lock nut	Mutter selbstsichernd	Ecrou autobloquant
10	2	KR.01.01.01	Koker			
11	1	KR.01.02.01L	Hoofdframe L			
12	1	KR.01.02.01R	Hoofdframe R			

Bijlage: Onderdelen

A-A (1:1)

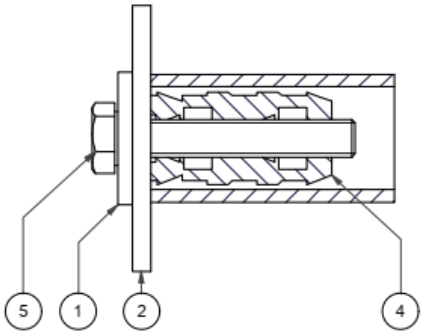

KR.02.00.00	Zakhouder	Bag holder
	Taschenhalter	Porte-sac

VSS MACHINEBOUW	Onderdelen	Spare-parts	Ersatzteile	Pieces de rechange
	KR.02.00.00 Zakhouder			Rev 1

Ovezandseweg 6a
4436 RE Oudelande
Tel: +31 113 567050
Fax:+31 113 563939
www.vssmachinebouw.com

Pos.	#	No.	Omschrijving	Description	Beschreibung	Description
1	2	DIN 440 M8	Carrosseriering zwaar	Flathead countersunk	Unterlegscheibe	Vis tête fraisée
2	2	DIN 9021A M18	Carrosseriering	Coach bolt washer	Karosseriescheibe	Rondelle de carrosserie
3	1	KR.02.01.01	Buis voor zak			
4	2	KR.02.02.01	Buisverbinding recht			
5	2	DIN 933 M8x45	Tapbout M8x45			

Bijlage: Onderdelen

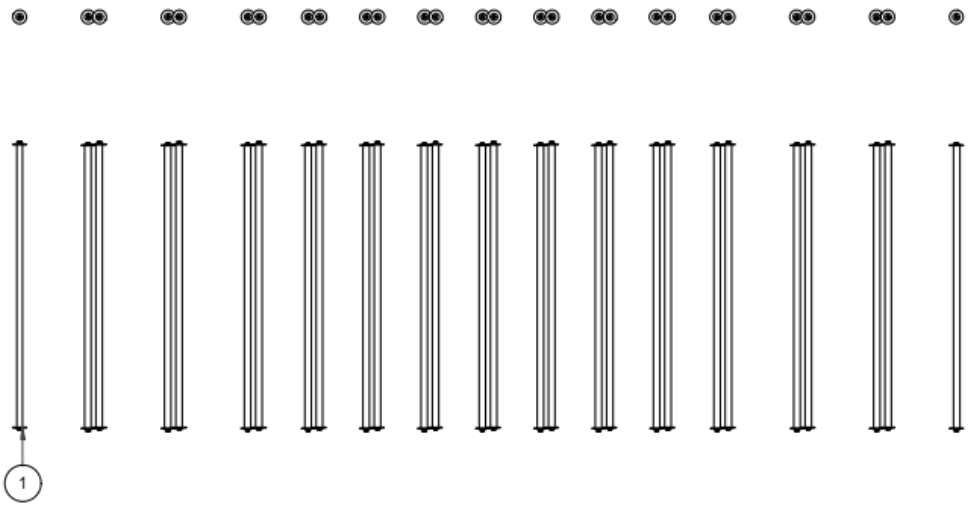

KR.02.14.00	Draagstangen 14 zakken (28 stangen)	Carrying bars bags
	Tragstange tasche	Bar comptable poche

VSS MACHINEBOUW	Onderdelen	Spare-parts	Ersatzteile	Pieces de rechange
	KR.02.14.00 Draagstangen 14 zakken (28 stangen) Rev 1			Ovezandseweg 6a 4436 RE Oudelande Tel: +31 113 567050 Fax:+31 113 563939 www.vssmachinebouw.com

Pos.	#	No.	Omschrijving	Description	Beschreibung	Description
1	28	KR.02.00.00	Zakhouder	Bag holder	Taschenhalter	Porte-sac

Bijlage: Onderdelen

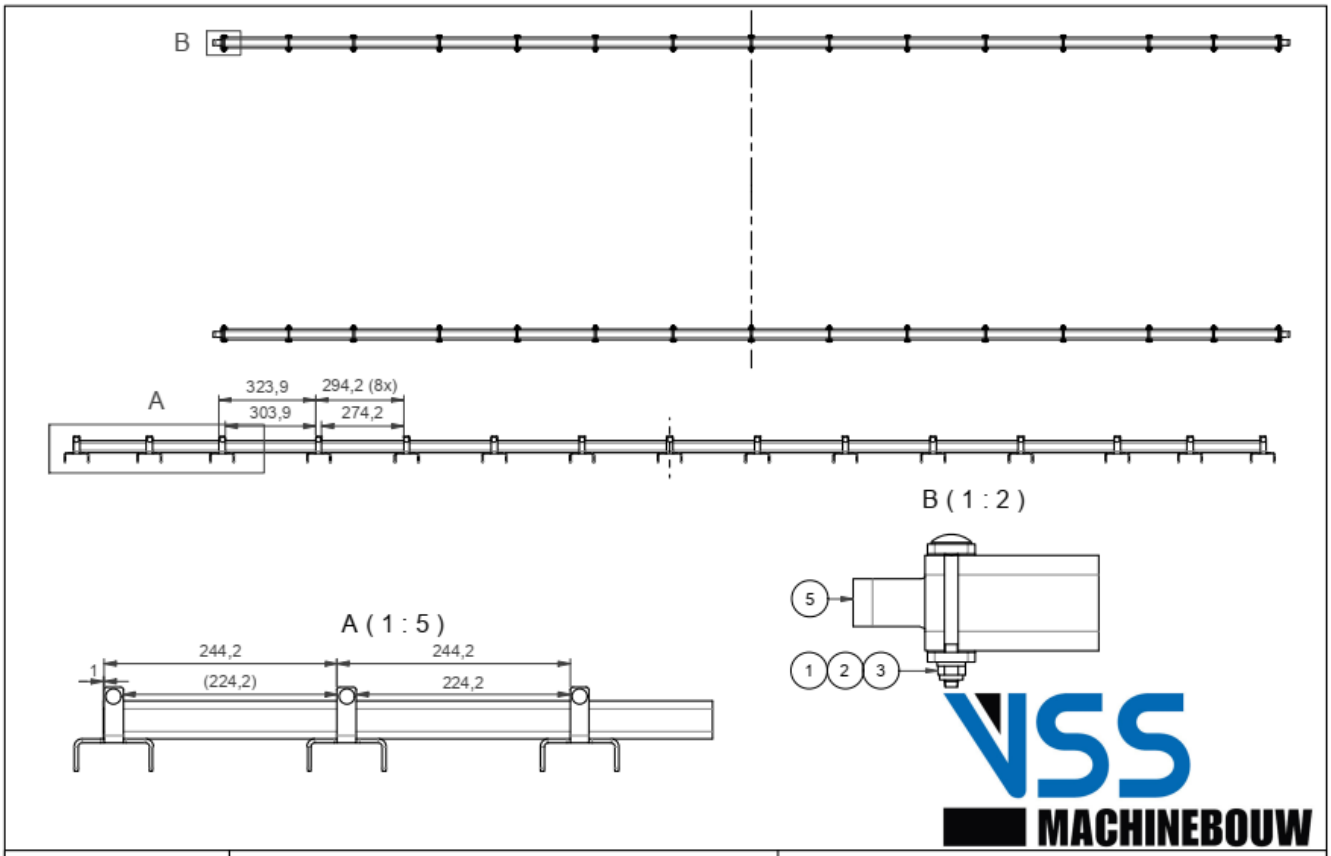

KR.03.14.00	Afstandhouders set 14 zakken (30 beugels)	Spacer
	Abstandshalter	Espaceur

VSS MACHINEBOUW

Onderdelen	Spare-parts	Ersatzteile	Pieces de rechange

KR.03.14.00
Afstandhouders set 14 zakken (30 beugels)

Rev 1

Ovezandseweg 6a
4436 RE Oudelande
Tel: +31 113 567050
Fax:+31 113 563939
www.vssmachinebouw.com

Pos.	#	No.	Omschrijving	Description	Beschreibung	Description
1	30	DIN 125A M6	Sluitring	Washer	Unterlegscheibe	Rondelle
2	30	DIN 603 M6x60	Slotbout	Bolt	Schraube	Boulon
3	30	DIN 985 M6	Borgmoer	Lock nut	Mutter selbstsichernd	Ecrou autobloquant
4	2	KR.03.01.01	Koker zijframe			
5	30	KR.03.02.01	Beugel			

Bijlage: Onderdelen

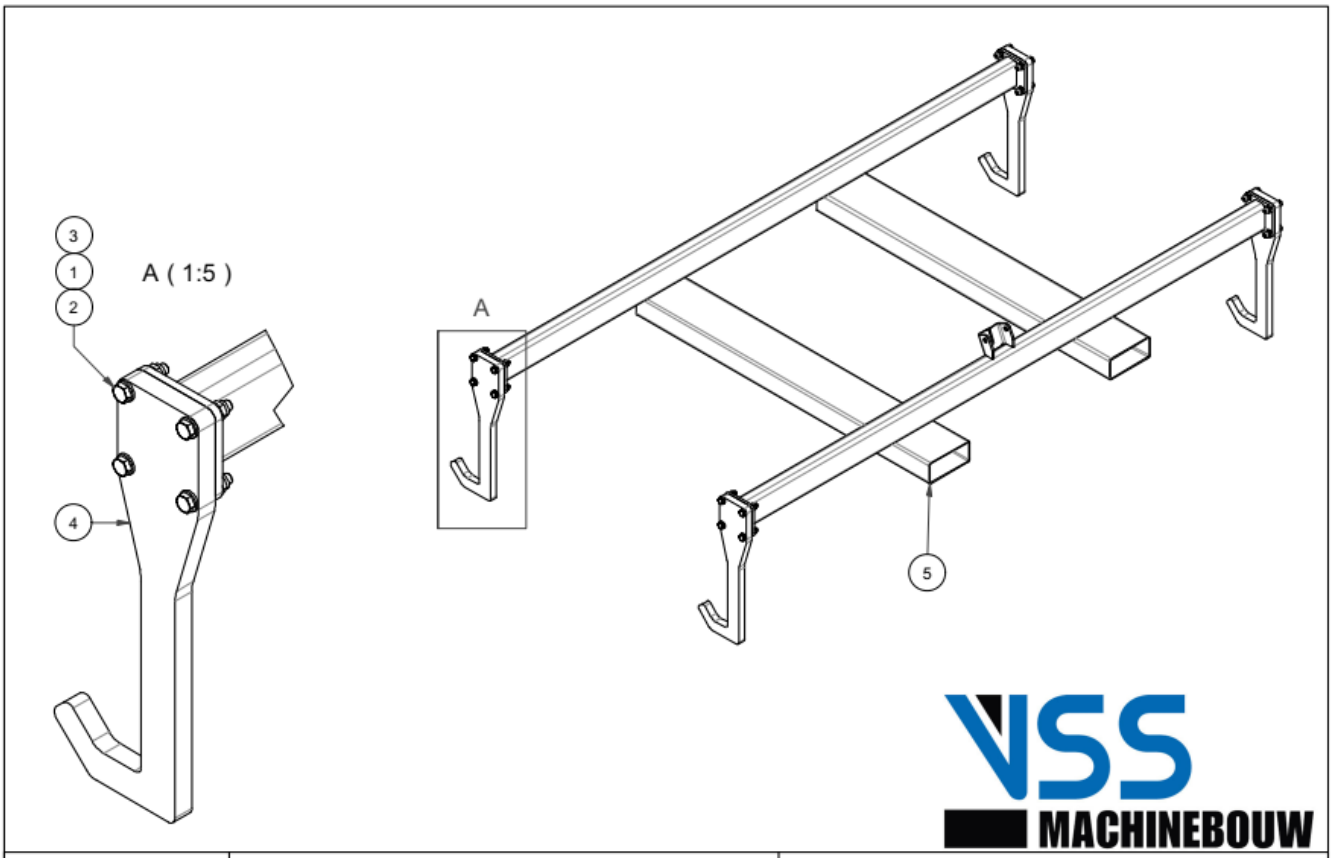

KR.04.00.00	Transportbok	Transport trestle
	Transportbock	Chevalet de transport

VSS MACHINEBOUW	Onderdelen	Spare-parts	Ersatzteile	Pieces de rechange
	KR.04.00.00 Transportbok			Rev

Ovezandseweg 6a
4436 RE Oudelande
Tel: +31 113 567050
Fax:+31 113 563939
www.vssmachinebouw.com

Pos.	#	No.	Omschrijving	Description	Beschreibung	Description
1	32	DIN 125A M12	Sluitring	Washer	Unterlegscheibe	Rondelle
2	16	DIN 931 M12x60	Zeskantbout	Bolt	Schraube	Boulon
3	16	DIN 985 M12	Borgmoer	Lock nut	Mutter selbstsichernd	Ecrou autobloquant
4	4	KR.04.01.01	Transport haak	-	-	-
5	1	KR.04.02.00	Transportbok			